The New Besam Swing door operator

PowerSwing

besam®

Main models of the PowerSwing operator

Standard cover

Special cover

Door leaf-mounted

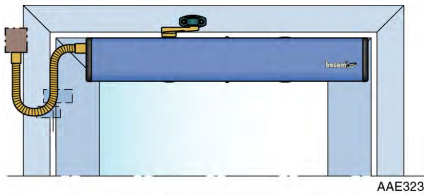

Double door operators

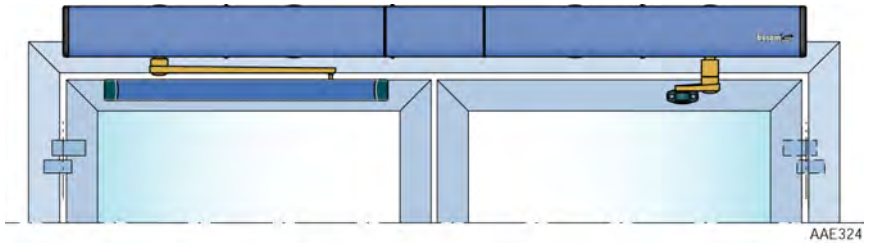

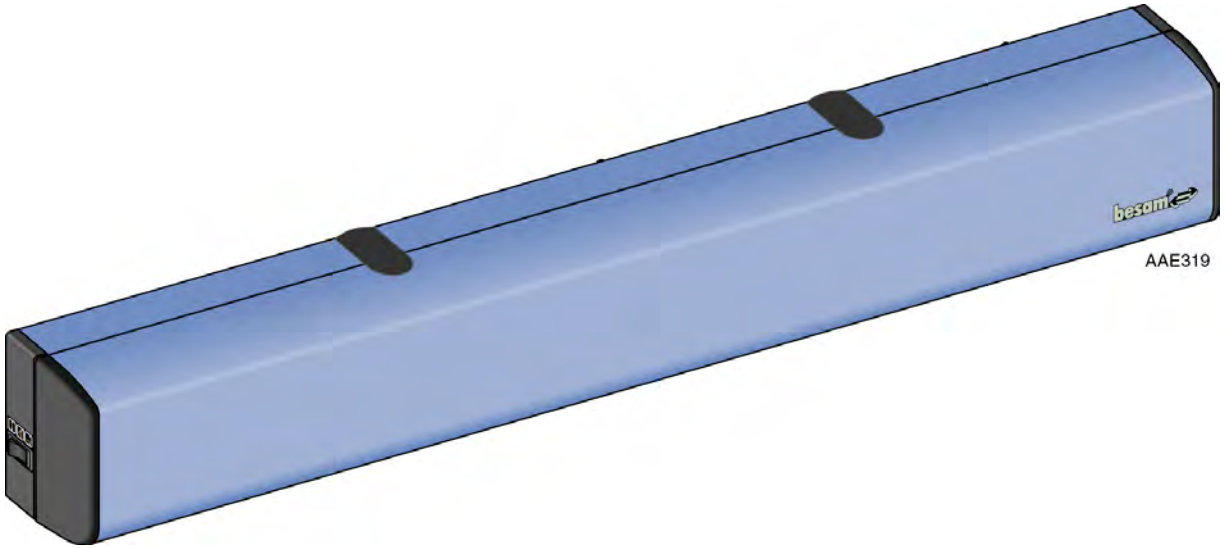

- The operator works electro-hydraulically.
- Closing power from a coil spring
- The open position is kept by a hydraulic valve.
- ”Lock kick” to overcome the resistance of a striking plate
- Dimension standard cover LxHxD 716x110x110 mm

besam®

Identification PowerSwing

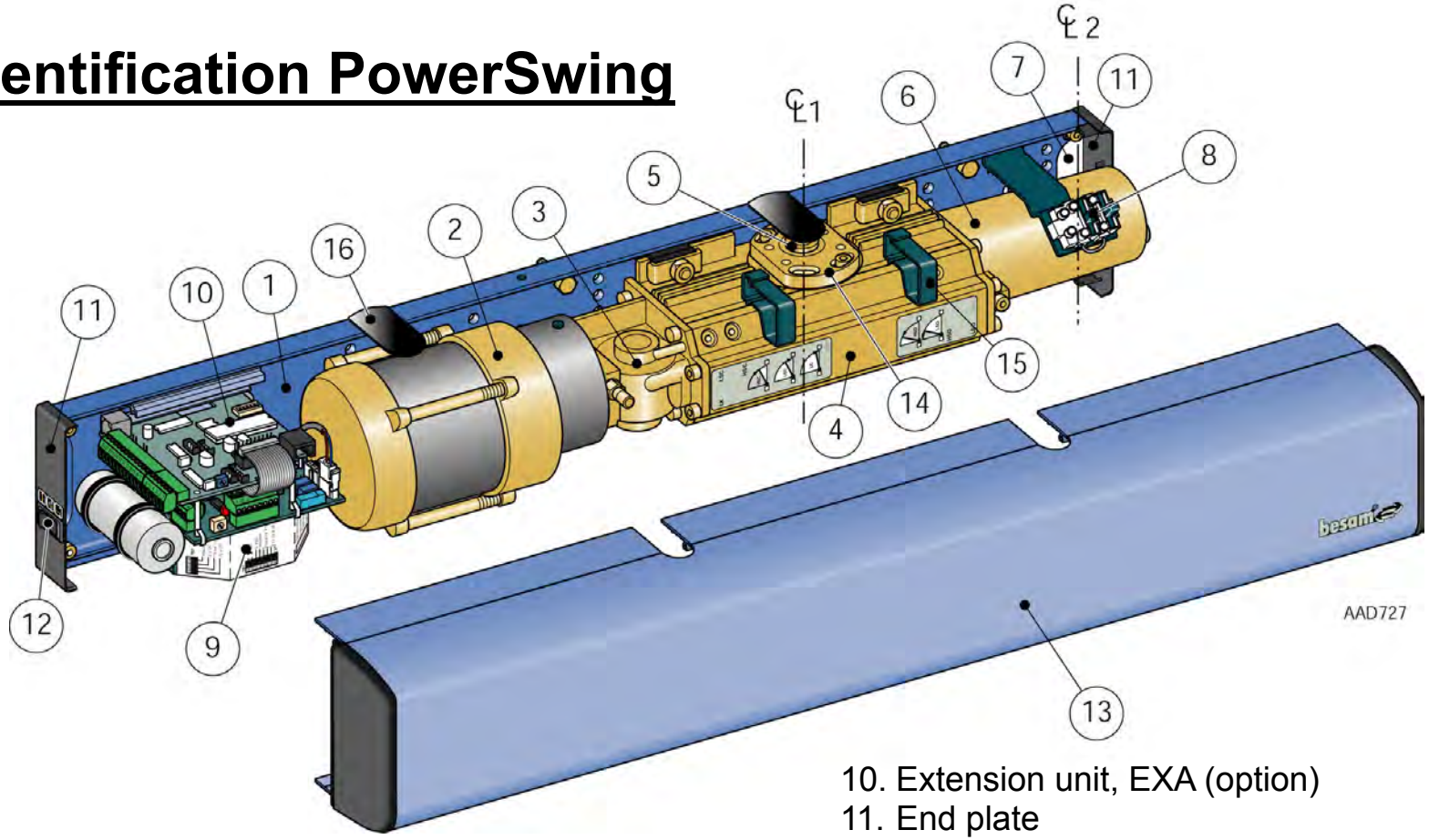

1. Mounting plate
2. Motor/ Pump
3. Valve
4. Hydraulic unit
5. Drive shaft
6. Spring tube
7. Cable inlet
8. Mains connection
9. Control unit, CSDA
10. Extension unit, EXA (option)
11. End plate
12. Programme selector, PS-3 (option)
13. Cover
14. Bearing sleeve
15. Cable holder
16. Lid

Arm systems

PUSH Arm system

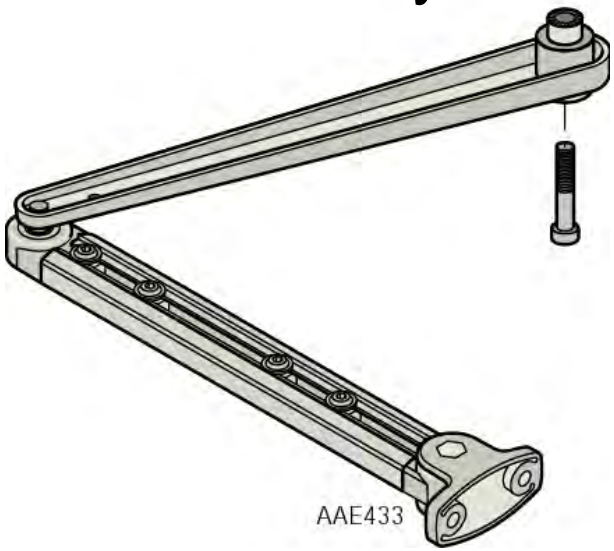

PULL Arm system

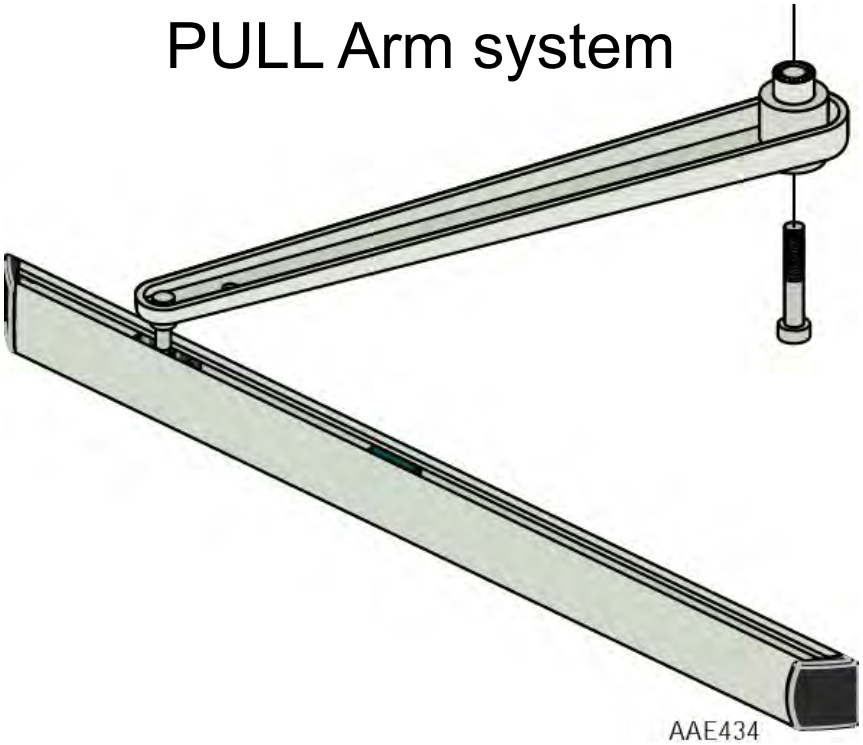

besam®

Wall mounted operator, arm system PUSH

- Decide X
- Draw a line on the wall for the underside of the mounting plate

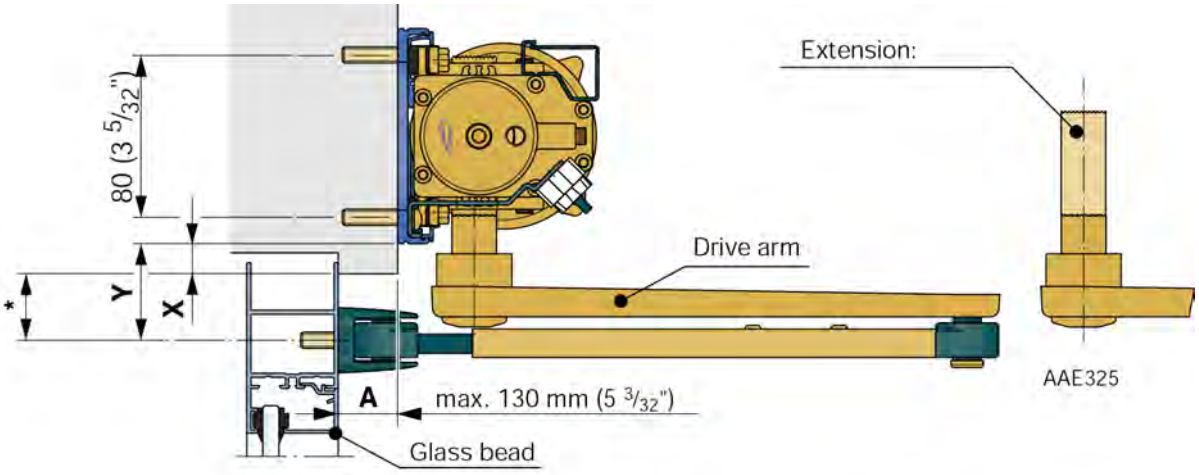

Extension	X	Y
None	2 – 17 (3/32"-11/16")	48 (1 29/32")
20	2 – 37 (3/32"-1 15/32")	68 (2 11/16")
50	2 – 67 (3/32"-2 21/32")	98 (3 27/32")
70	2 – 87 (3/32"-3 7/16")	118 (4 21/32")

Note!

- Door adaptor should not be mounted on glass bead
- Extension has to be used if operator must be mounted higher up on the wall

* Min. 31 mm to enable drive arm to pass underneath

besam®

Wall mounted operator, arm system PUSH

- Cut out the appropriate template from the card board box
- Ensure that the template aligns with the drawn line (X) and the ℄1.
- Use the stickers in the mounting kit to fix the template to the wall
- Punch where to drill

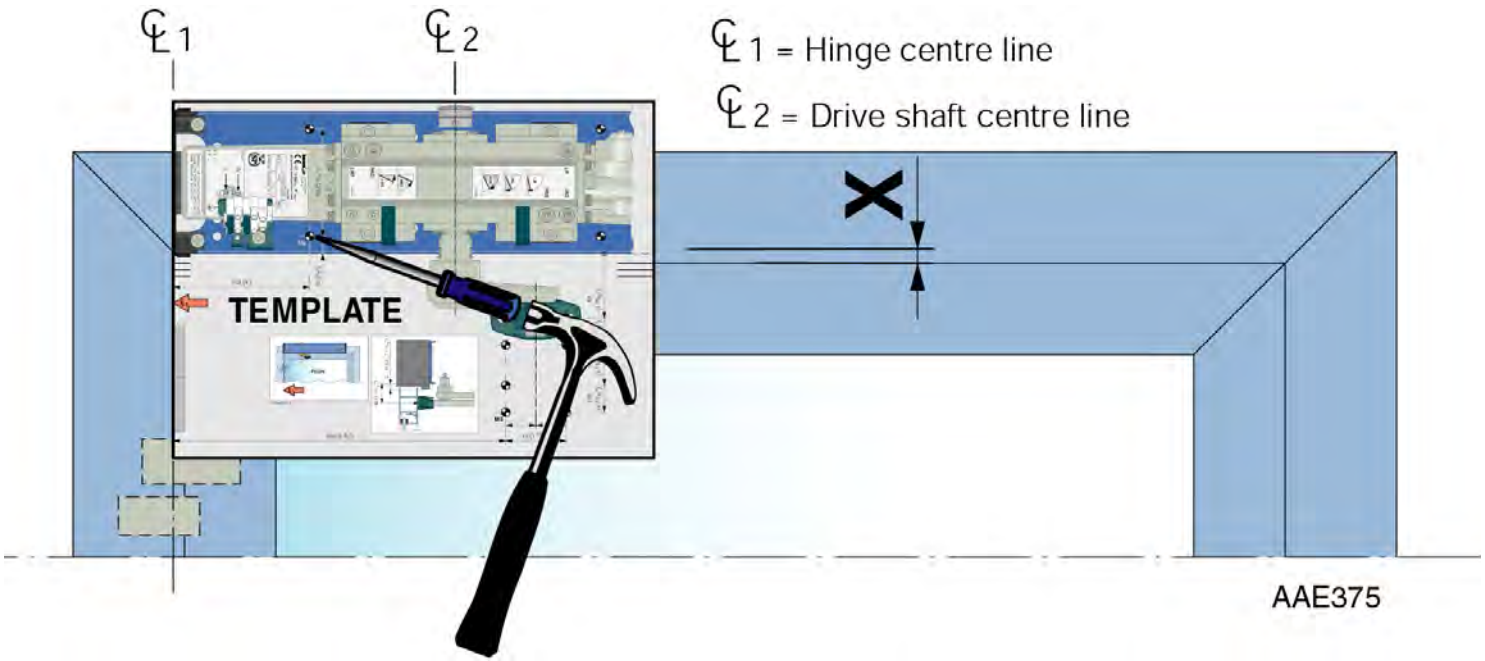

Wall mounted operator, arm system PUSH

1. Drill the four mounting holes and the two holes for the door fitting.
2. Remove the template.
3. Tap, plug, or reinforce with rivnuts and screw the drive unit tight.

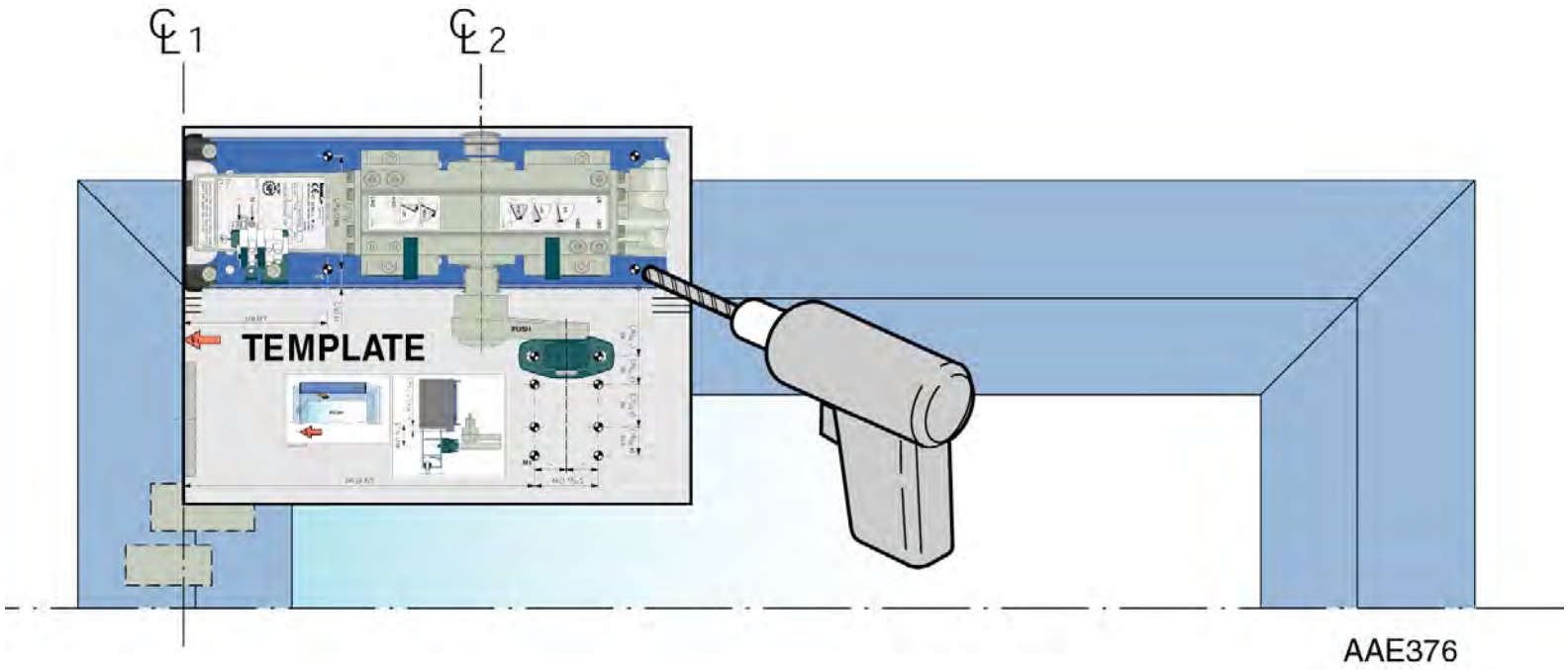

besam®

Mounting the PUSH drive arm

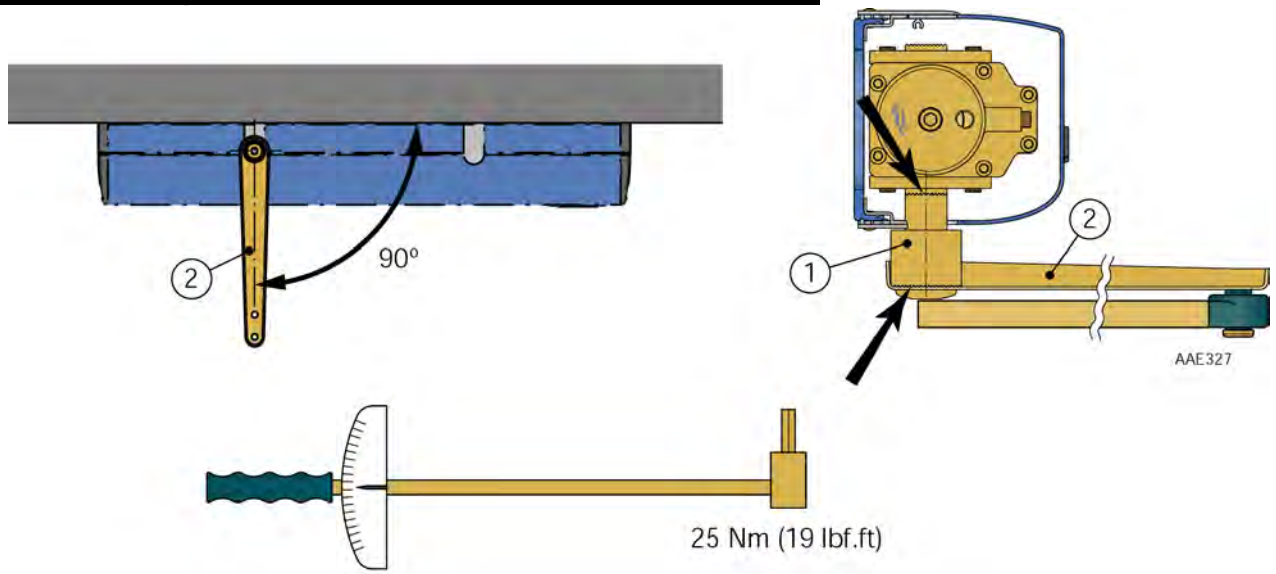

1. Adaptor
2. Drive arm

1. Remove the door fitting from the arm system.
2. Screw the door fitting to the door leaf tight.
3. Mount the drive arm and adaptor on the operator drive shaft at an angle of 90° to the wall.
4. Ensure that the teeth of the adaptor engage fully with the operator shaft. Tighten the screw to a torque of 25 Nm. (19 lbf.ft)

besam®

Adjusting the PUSH arm system

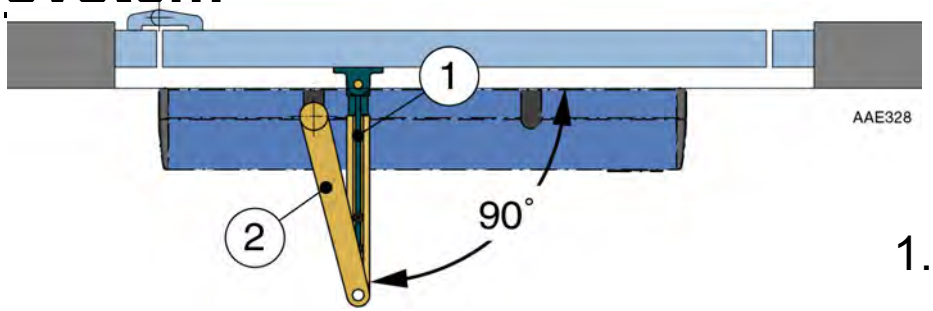

1. Telescopic part
2. Drive arm

1. Open the door and connect the door fitting with the drive arm (do not tighten the lock screws).
2. Close the door and keep it closed.
3. Turn the drive arm until the telescopic part is at an angle of 90° to the door.
4. Tighten the telescopic part with the lock screws.

besam®

Wall mounted operator and arm system PULL

Changing the direction of rotation

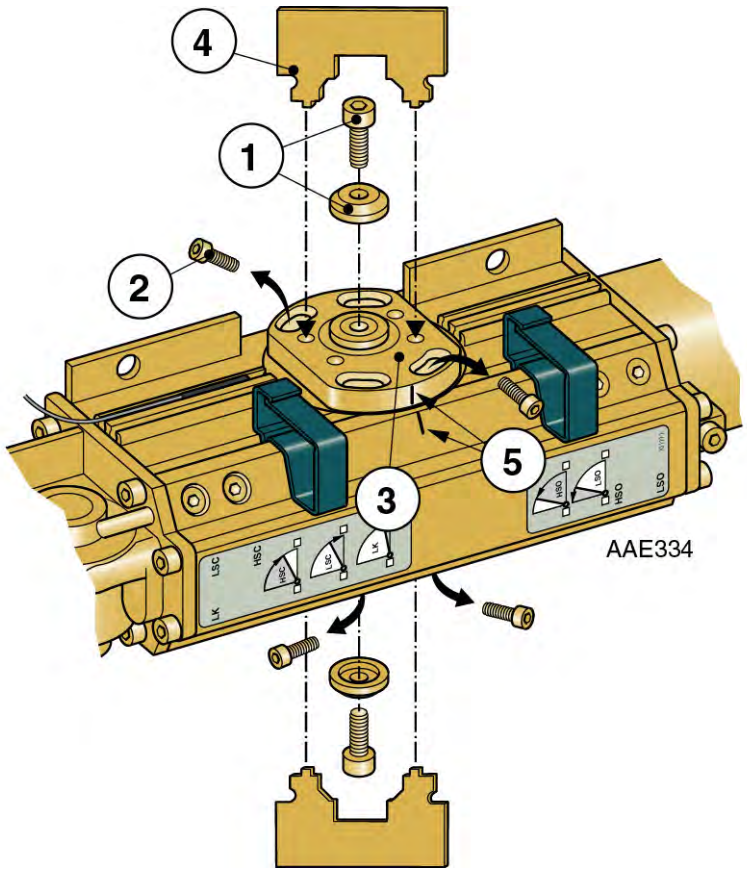

1. Mount the washer with the screw in the drive shaft, one from each side.
2. Dismantle the screws (4 pcs) from the bearing sleeves on both sides.
3. Fit the tools in the holes, one from each side and turn both bearing sleeves simultaneously approx. 165° until the setting lines in the bearing sleeves are aligned with the setting lines in the housing.
4. Remount the four screws in the bearing sleeves and dismantle the washers and screws.
5. Setting lines.

besam®

Wall mounted operator, arm system PULL

- Decide Z
- Draw a line on the wall for the underside of the mounting plate

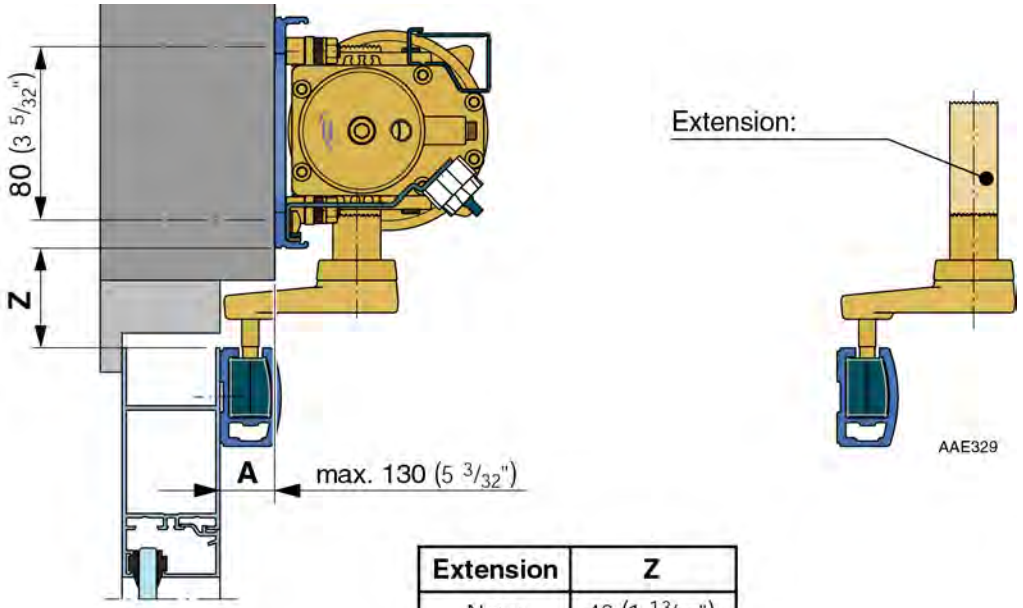

Extension	Z
None	46 (1 13/16")
20	66 (2 19/32")
50	96 (3 25/32")
70	116 (4 9/16")

Note!

•Door adaptor should be mounted aligned with upper edge of the door

•Extension has to be used if operator must be mounted higher up on the wall

besam®

Wall mounted operator, arm system PULL

- Cut out the appropriate template from the card board box
- Ensure that the template aligns with the drawn line (Z) and the ℄1.
- Use the stickers in the mounting kit to fix the template to the wall
- Punch where to drill

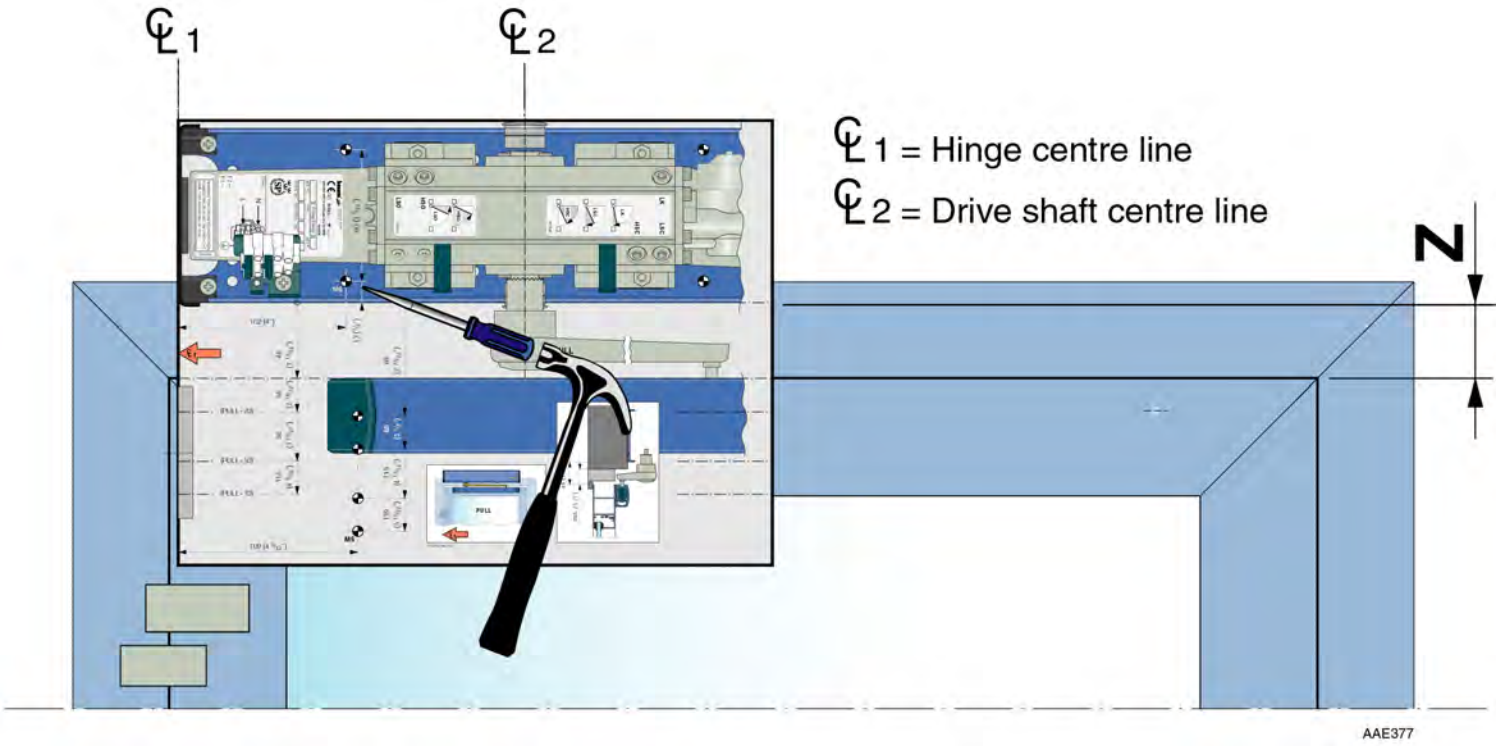

besam®

Wall mounted operator, arm system PULL

1. Drill the four mounting holes and the two holes for the door fitting.
2. Remove the template.
3. Tap, plug, or reinforce with rivnuts and screw the drive unit tight.

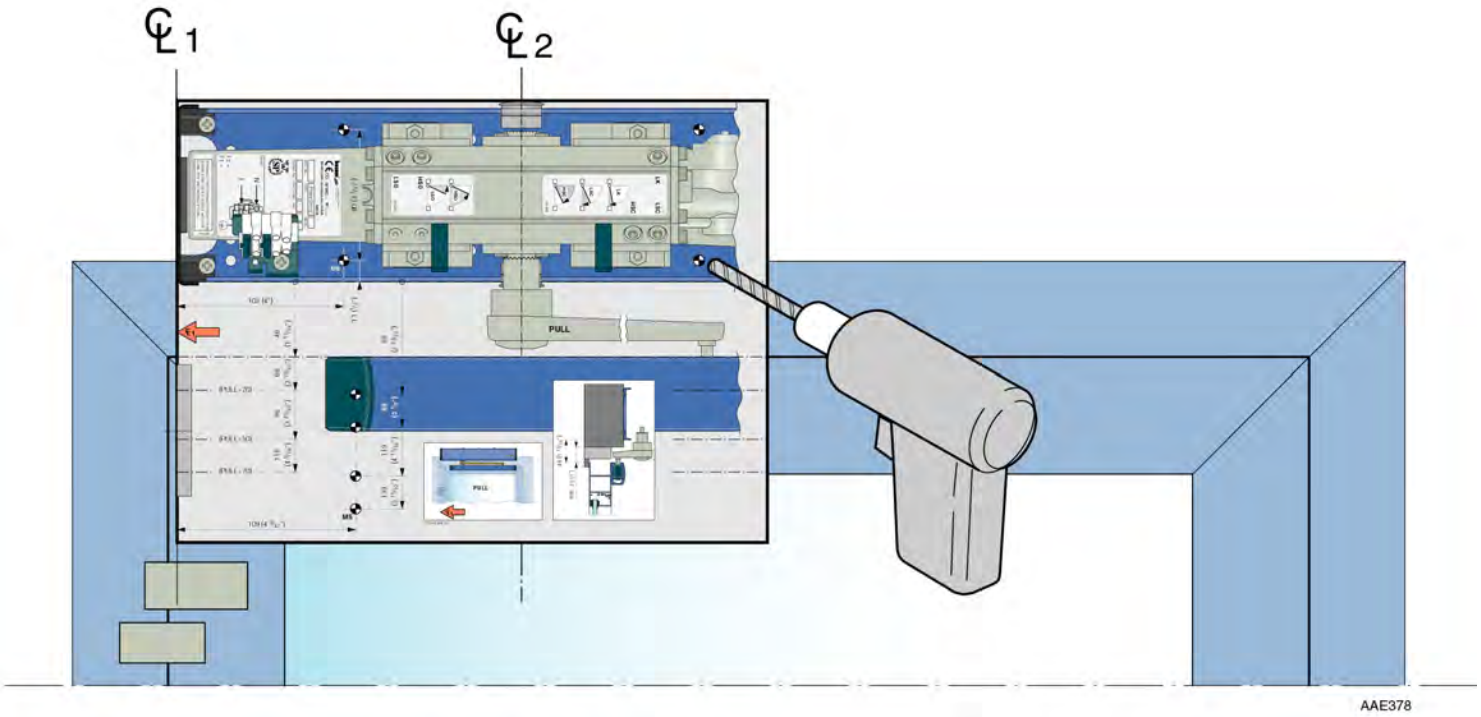

besam®

Mounting the PULL door fitting

1. Door fitting
2. Door stop
3. Butt hinge

1. Tap, plug, or reinforce with rivnuts and screw the door fitting tight.

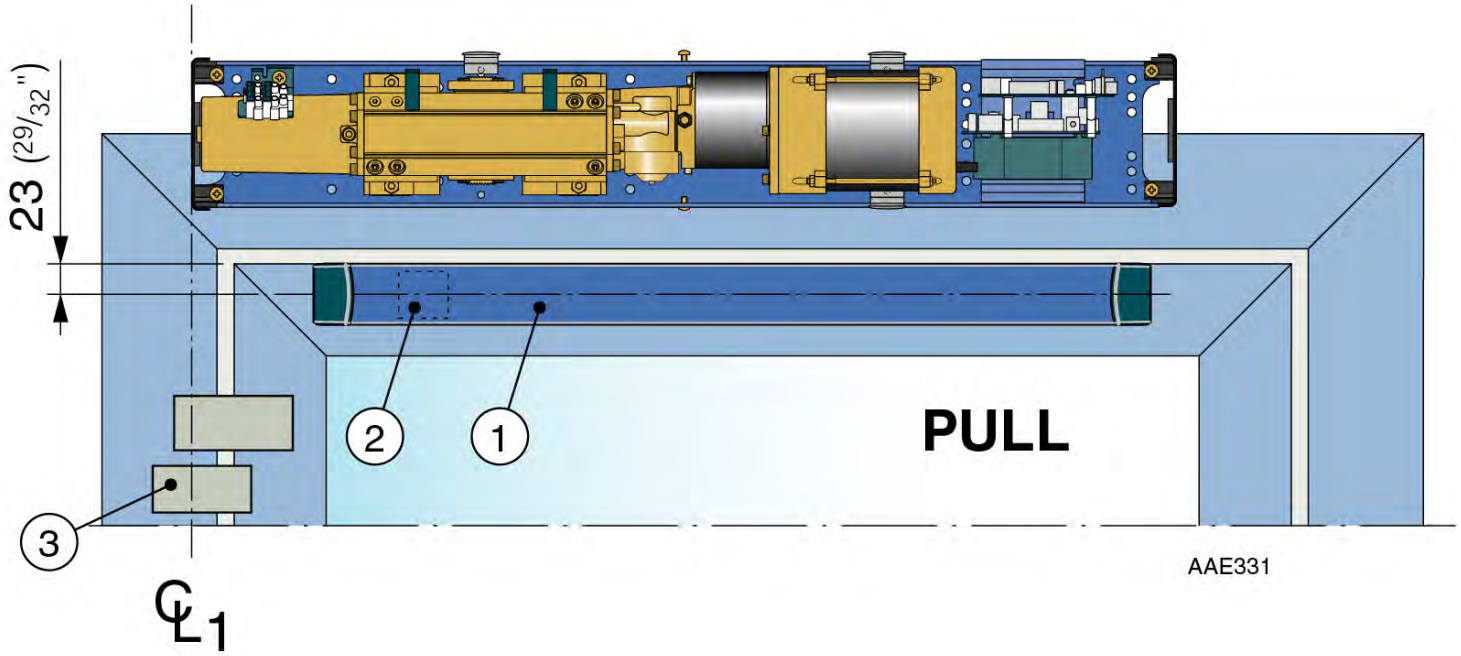

besam®

Mounting the PULL drive arm

1. Connect the mains power
2. Open the door to an angle of 90°
3. Give constant impulse by strapping the impulse inputs on the control unit. The operator drive shaft turns to a factory set position.

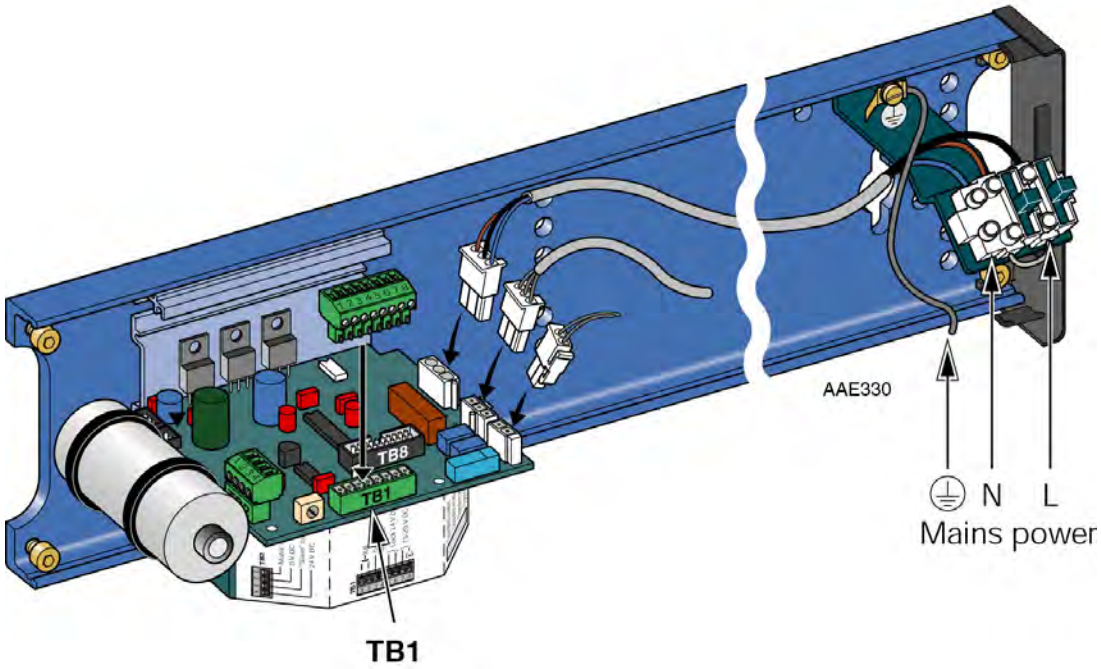

besam®

Cont. Mounting the PULL drive arm

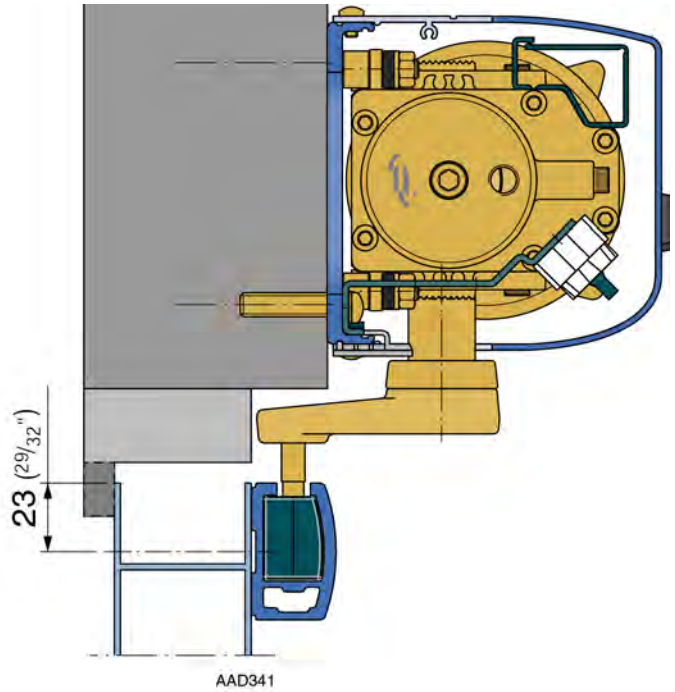

4. Slide the guide shoe into the door fitting.
5. Mount the drive arm on the operator drive shaft with the door in unchanged position 90°. Ensure that the teeth of the adaptor fit well with the operator.
6. Tighten to a torque of 25 Nm (19 lbf.ft)
7. Slide the arm stop against the guide shoe and then back 20 mm (3/4”). Fasten the arm stop.
8. Remove the strapping. The motor turns off and the door closes.
9. Snap on the end plates to the door fitting.

besam®

Control units

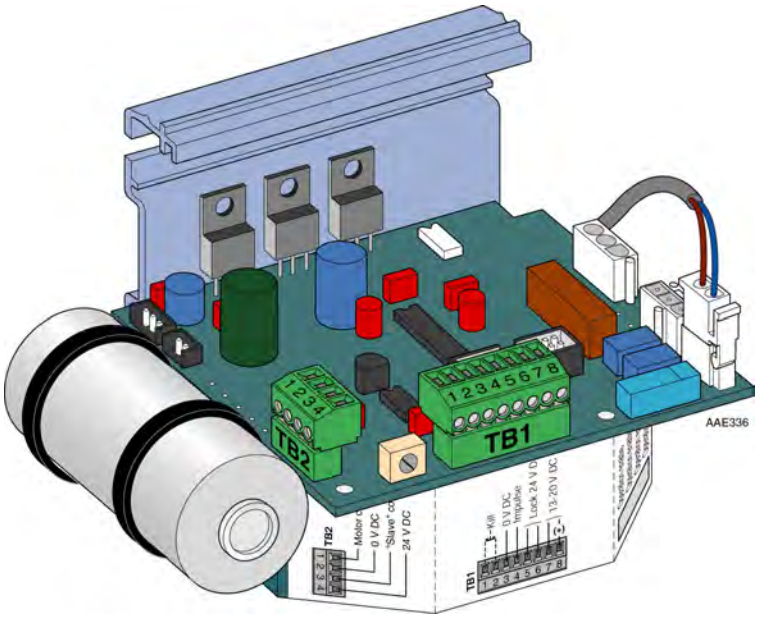

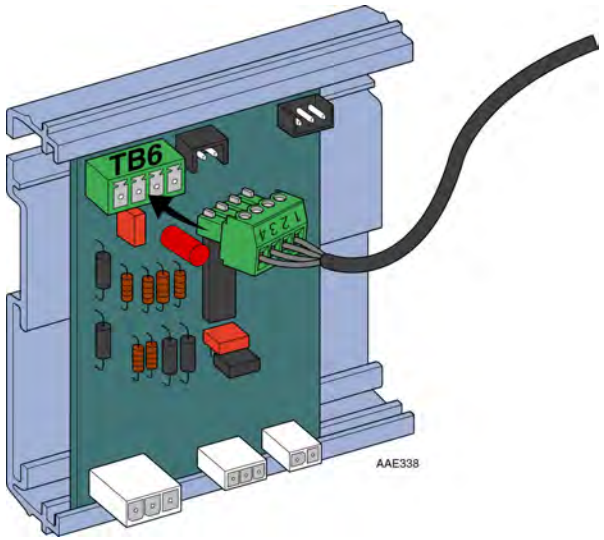

CSDA

This basic control unit is equipped with inputs for connection of automatic and manual activation units.

CSDA-S

This slave control unit is used together with CSDA for double doors.

besam®

Control units

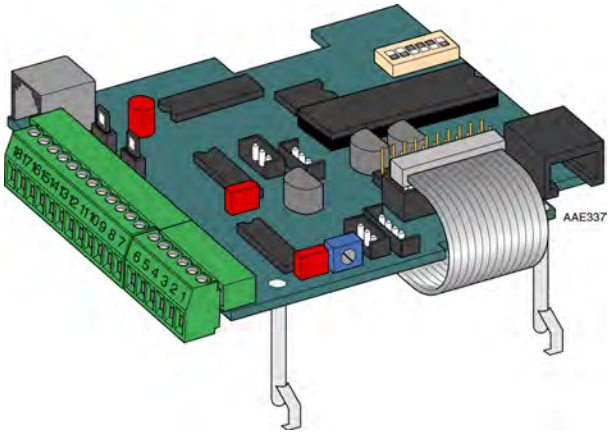

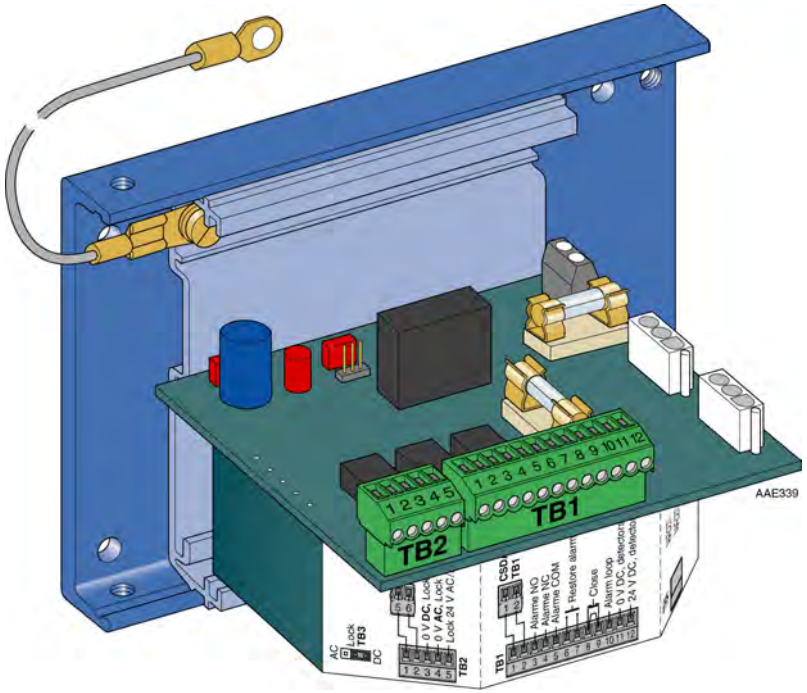

EXA

This extension unit is mounted on top of the CSDA to increase the CSDA functions .

CSDA-F

This unit is used if there are requirements for extended functions when the operator is used on fire doors or for connection of 24 V AC.

besam®

Connection of control unit CSDA – single doors

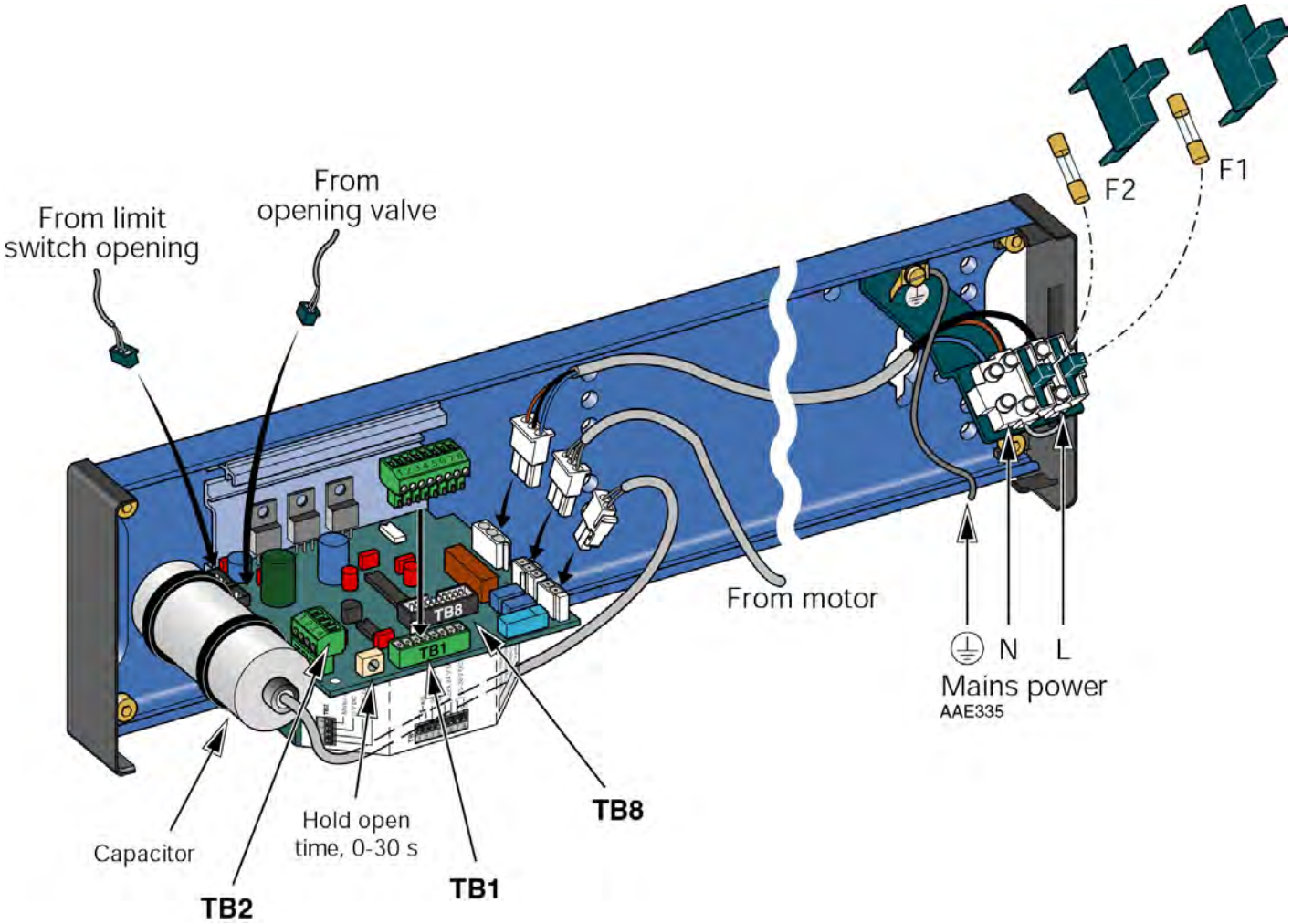

Connection of TB1, TB2 and TB8

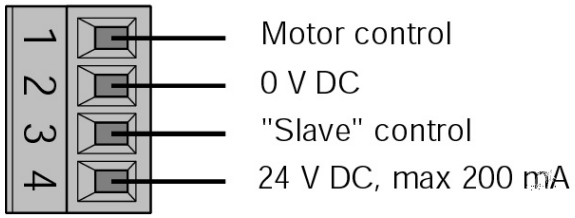

TB2

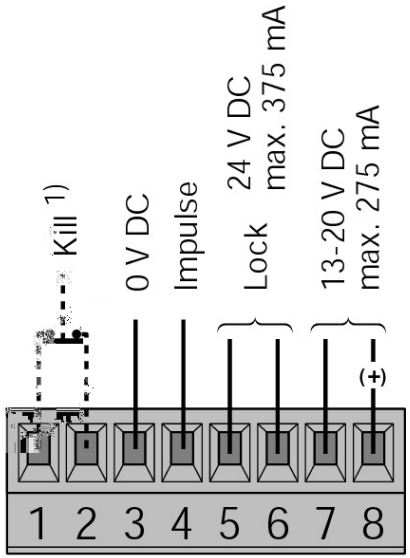

TB1

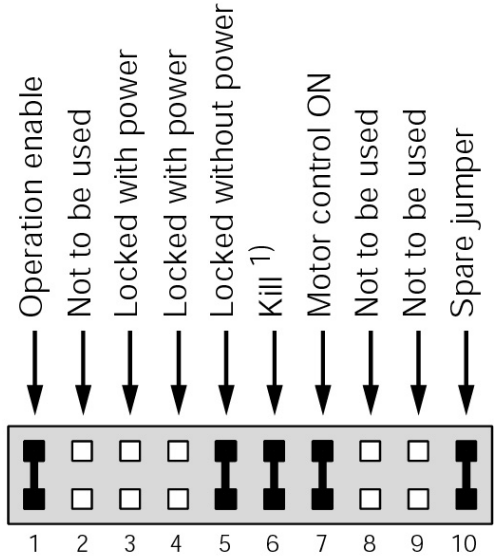

TB8

1) Remove jumper "Kill" on TB8 when connecting to terminals No. TB1:1 and 2

besam®

Connection of control units CSDA and CSDA-S – double doors

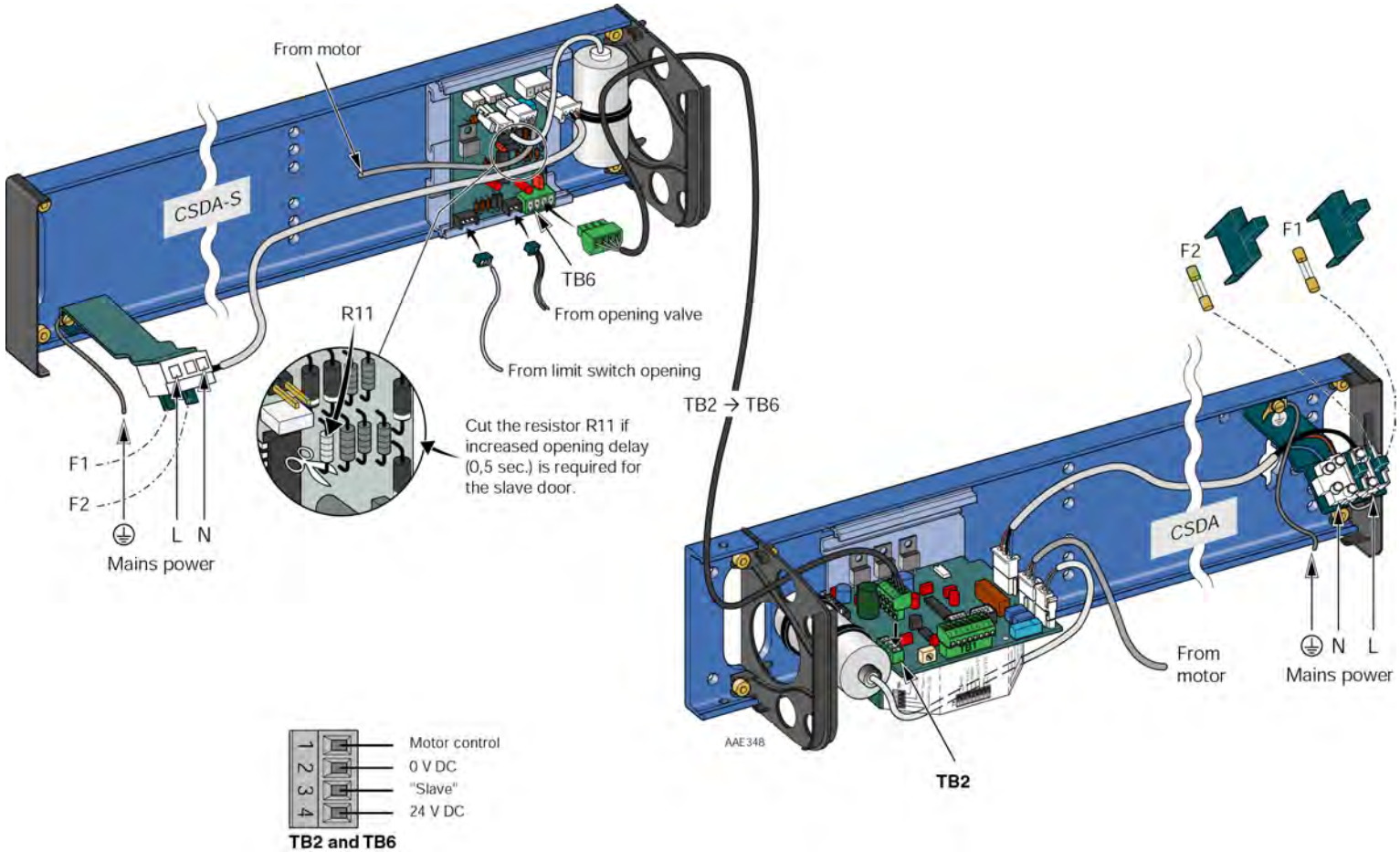

besam®

Connection of extension unit EXA – option

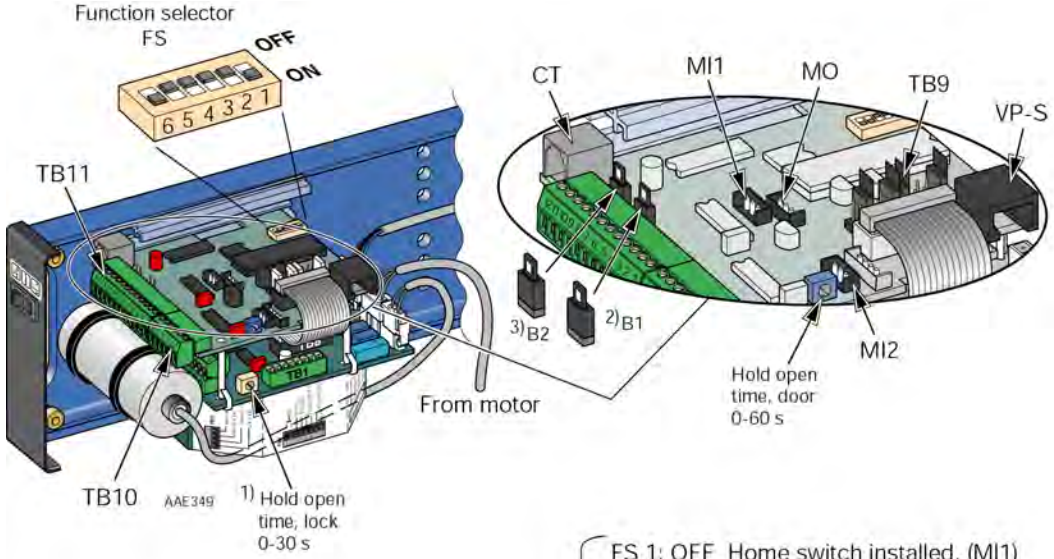

FS

- FS 1: OFF Home switch installed. (MI1)
  - ON Home switch **not** installed.
- FS 2: Controls the function of presence impulse when door is **not** closed
  - OFF The door **reopens** if presence impulse activated during closing.
  - ON The door **continues to close** if presence impulse activated during closing.
- FS 3: Controls the function of presence impulse when door **is** closed
  - OFF Opening impulse **not** prevented if presence impulse activated.
  - ON Opening impulse prevented if presence impulse activated.
- FS 4: OFF Make contact- on presence impulse inputs.
  - ON Break contact- on presence impulse.
- FS 5: OFF PS-3A **not** connected.
  - ON PS-3A connected.
- FS 6: Not used- always **ON**.

besam®

EXA extension unit

Connection of TB9, TB10 and TB11

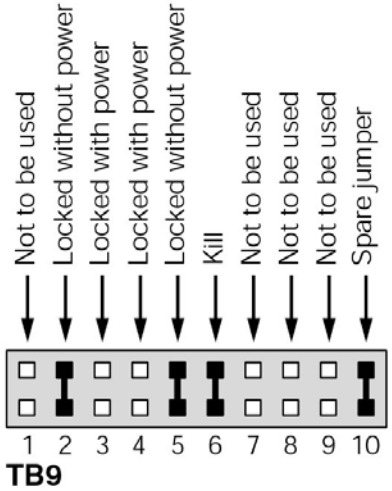

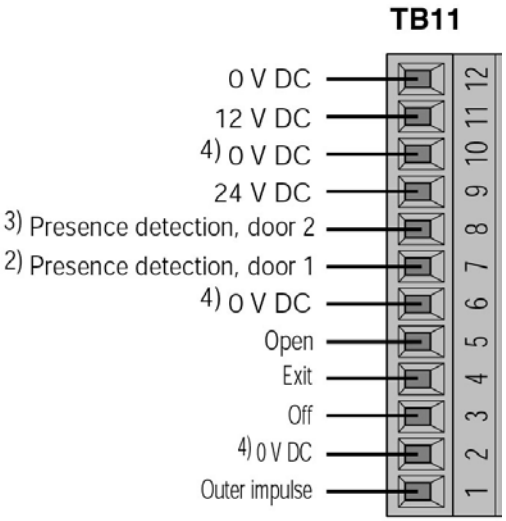

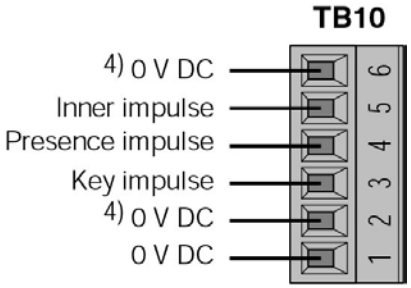

1) The terminal TB1:4 on the basic control unit CSDA is changed to lock opening impulse in all programme selector settings when the extension unit EXA is installed
2) Remove programme jumper B1 when connecting to terminal No. 7
3) Remove programme jumper B2 when connecting to terminal No. 8
4) These terminals will not be 0 V DC when "kill" (on the basic control unit CSDA) is activated

AAE350

besam®

Adjustment

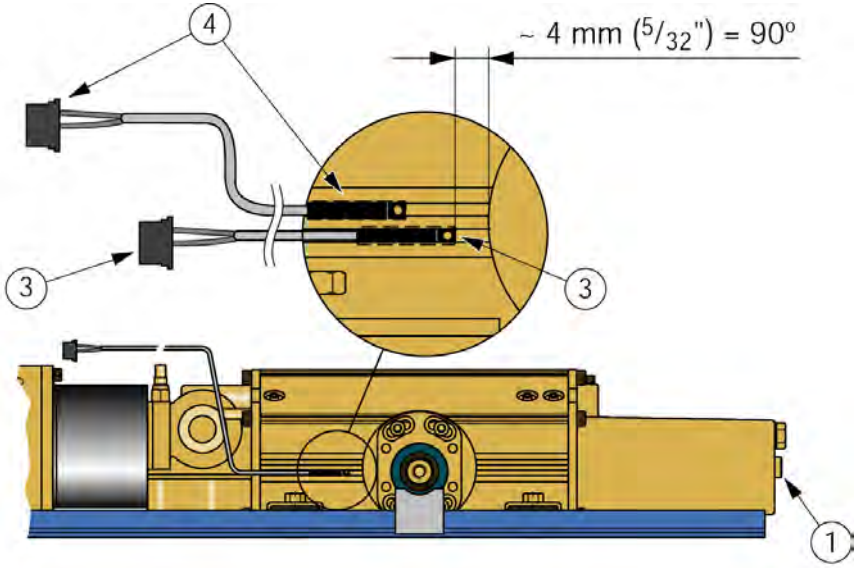

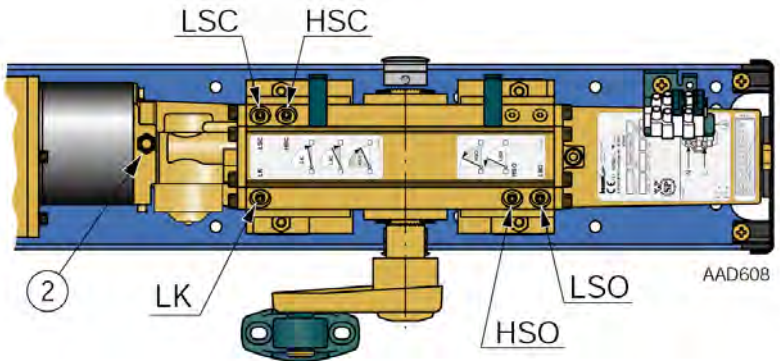

HSO= High speed opening valve

LSO= Low speed opening valve

HSC= High speed closing valve

LSC= Low speed closing valve

LK="Lock kick" screw

1. Adjustment screw for spring force
2. Adjustment screw for pump pressure
3. Limit switch for adjustment of opening angle
4. Limit switch (option) 1A 200V DC

besam®

Start-Up

Give a short opening impulse by strapping the impulse input and adjust if necessary as follows.

1. Set the hold open time with the potentiometer on the control unit CSDA, 0-30 s.

2. Adjustment of the **opening speed**.
   a) Adapt the high speed opening **HSO** to the existing traffic situation. Turning clockwise decreases the speed.
   b) The low speed opening **LSO** needs to be adjusted only if the door is extremely heavy. Turning clockwise decreases the speed.
   Note! If it is hard to obtain an even and smooth braking, the opening torque (pump pressure) must be reduced.

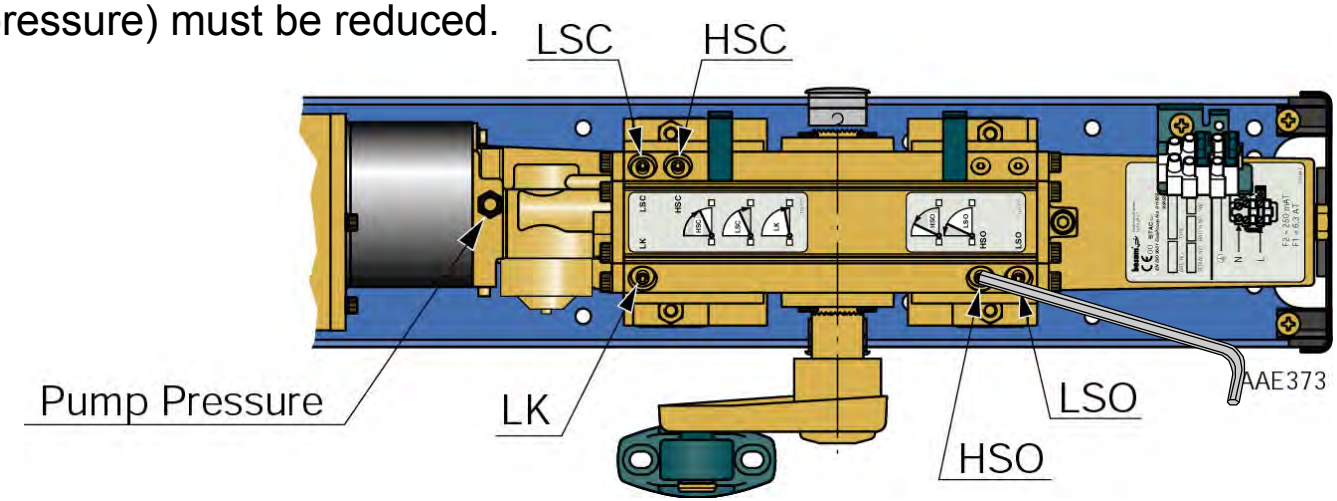

besam®

Cont. Start-Up

3. Adjustment of the **closing speed**.
   a) Adjust the low speed closing **LSC** as low as the traffic situation allows. Turning clockwise decreases the speed.
   b) Open the high speed closing valve, **HSC** (closed from factory) if a higher closing speed is required.

4. If an electromechanical striking plate is installed, an additional **lock-kick** can be obtained. This valve screw is normally closed. Start to open the screw 90°. Opening the screw too much may affect the start of the opening cycle.

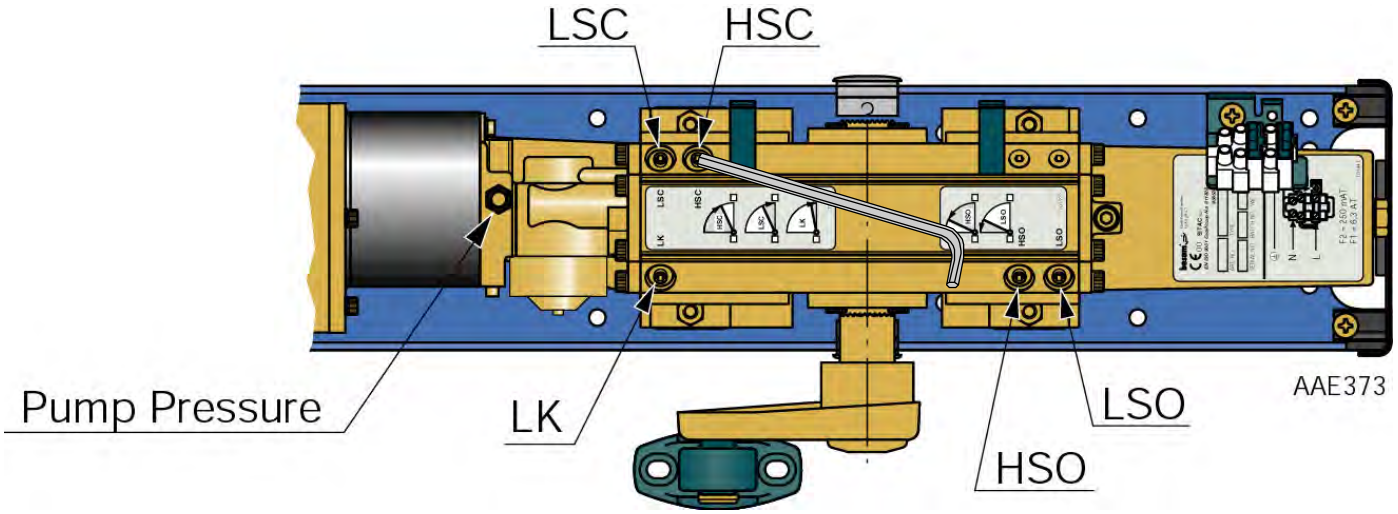

besam®

Cont. Start-Up

5. Fine-adjust the **opening angle** by means of the **limit switch**. Unlock the lock screw. By moving the limit switch closer to the motor the opening angle is reduced.
   Note! To make the adjustment easier, the limit switch can be moved to the underside of the hydraulic unit. Any of the grooves can be used.

6. Check that the installation complies with valid regulations and requirements from the authorities.

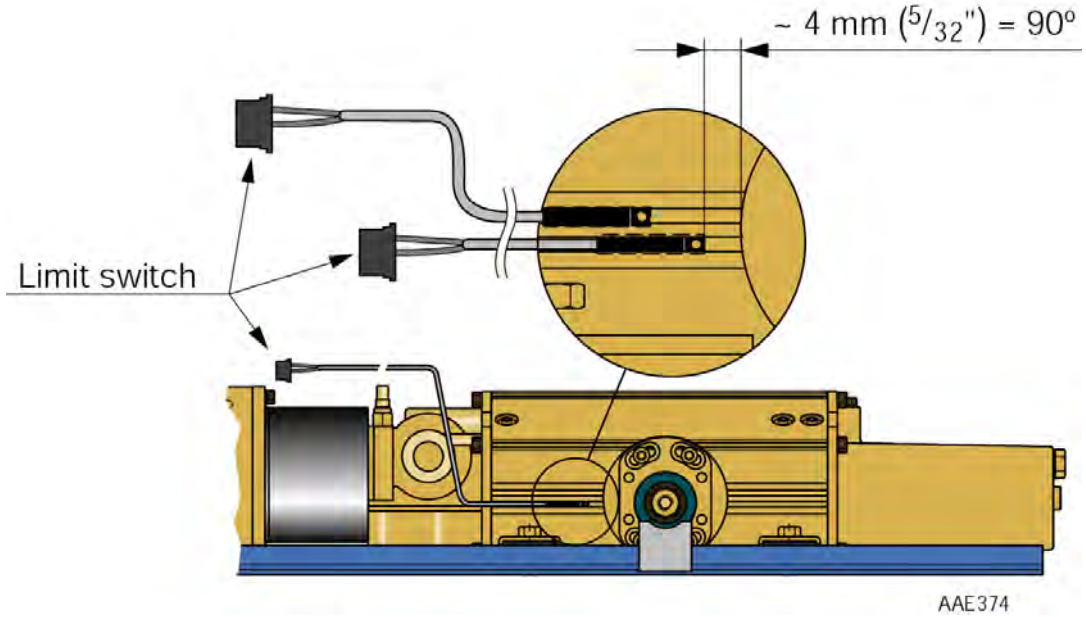

besam®

Closing torque

To comply with authority requirements or to overcome over/under pressure the closing torque can be adjusted.

The **closing torque (spring force)** is adjusted by means of an Allen screw placed at the end of the spring tube. The end plate has to be dismantled. Turning the screw clockwise increases the force. One turn equals a torque change of approx. 1 Nm (0,75 lbf.ft). The door must be in open position when the torque is adjusted.

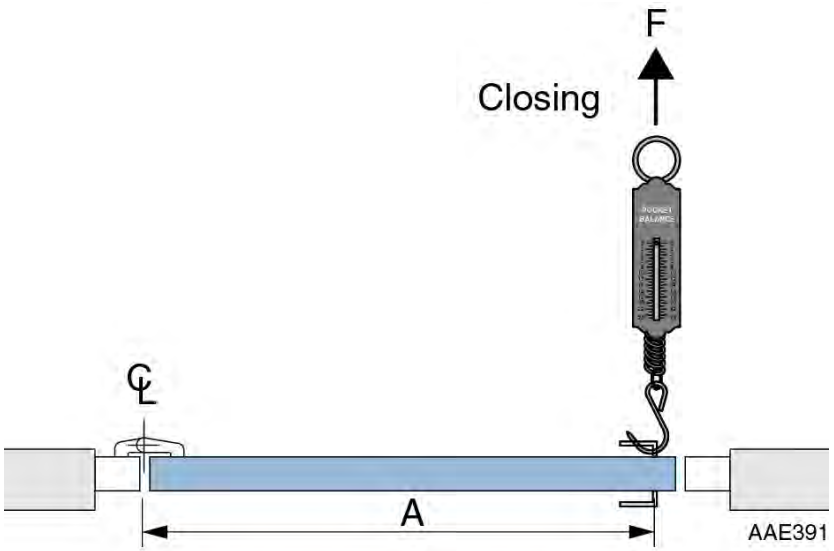

Torque = F (N) x A (m)
F (lbf) x A (ft)

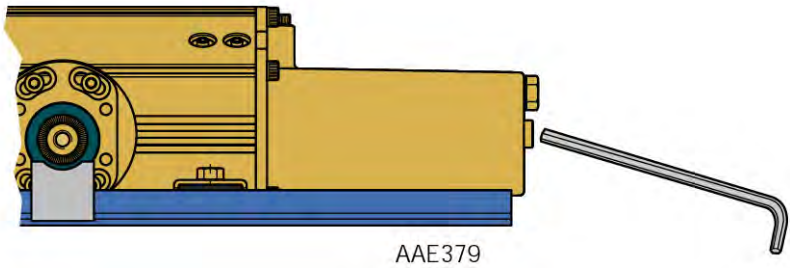

besam®

Opening torque

1. If the closing torque (spring force) has been changed, or if the door does not open to its full extent, the **opening torque (pump pressure)** must be adjusted as follows:
2. The factory set torque for PUSH/SAS is 70 Nm and for PULL 40 Nm at an door opening angle of 0-2°.
3. Measure the opening torque by using a spring balance and adjust if necessary.
4. The torque is adjusted by means of an Allen screw placed on the pump. Unlock the lock nut and turn clockwise to increase the opening torque/pump pressure. One turn equals a torque change of approx. 30 Nm.

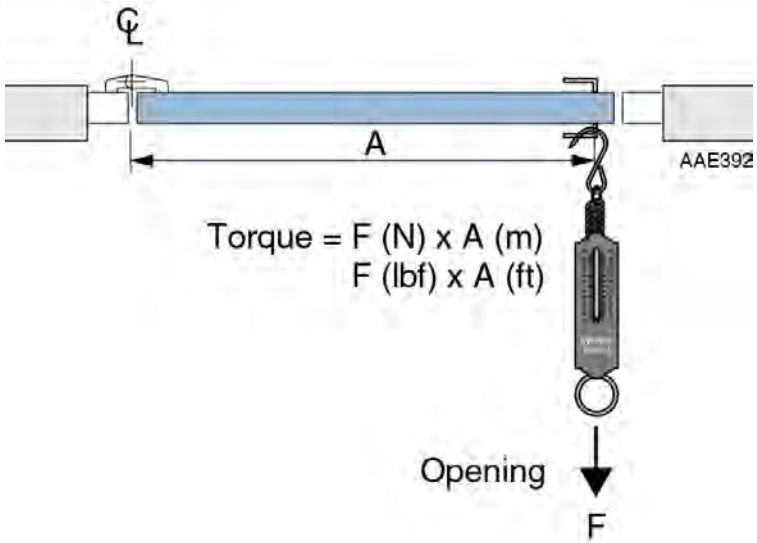

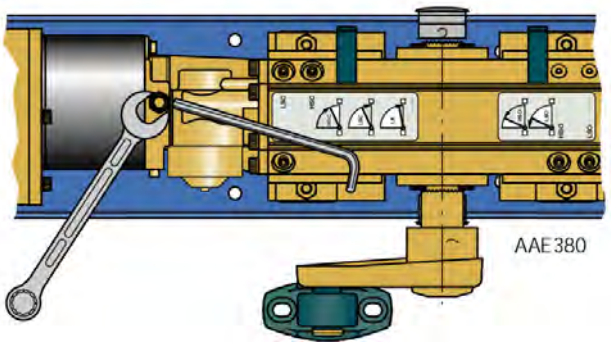

besam®

Connection of activation units and accessories

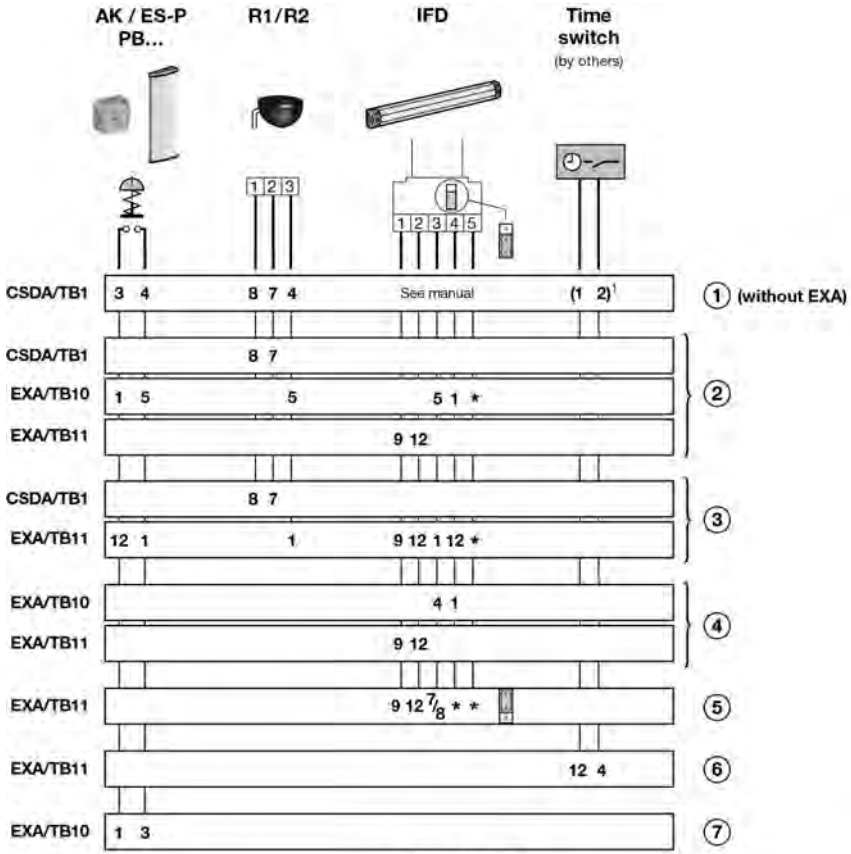

① Impulse
② Inner impulse
③ Outer impulse
④ Presence impulse
⑤ Presence detection. Note! The programme jumper setting
⑥ Switch closed = Outer impulse off, lock activated
⑦ Key impulse

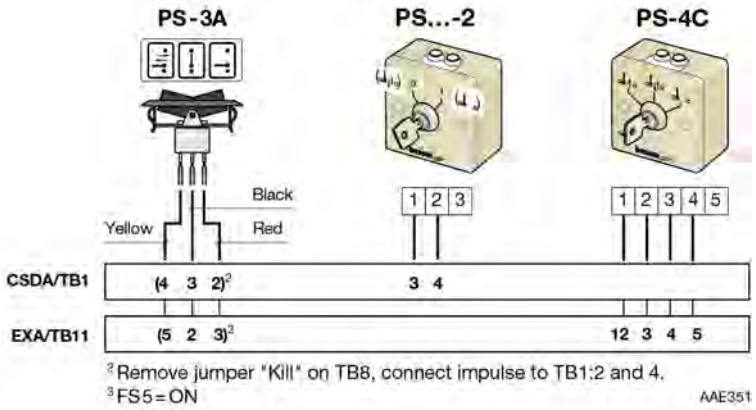

besam®

Fitting the standard cover

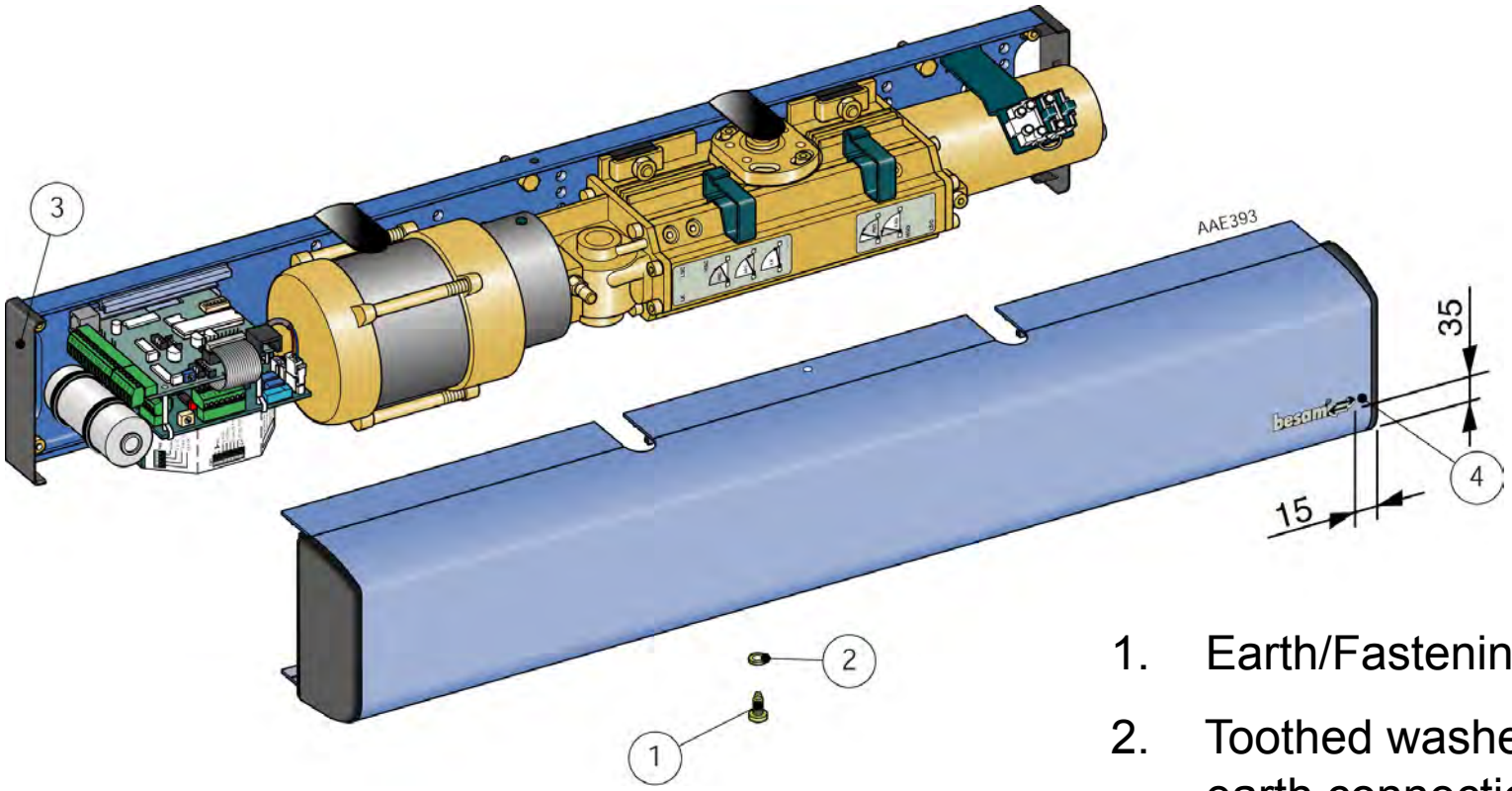

1. Earth/Fastening screw
2. Toothed washer for earth connection
3. End plate
4. Besam logotype

Fitting the double door cover

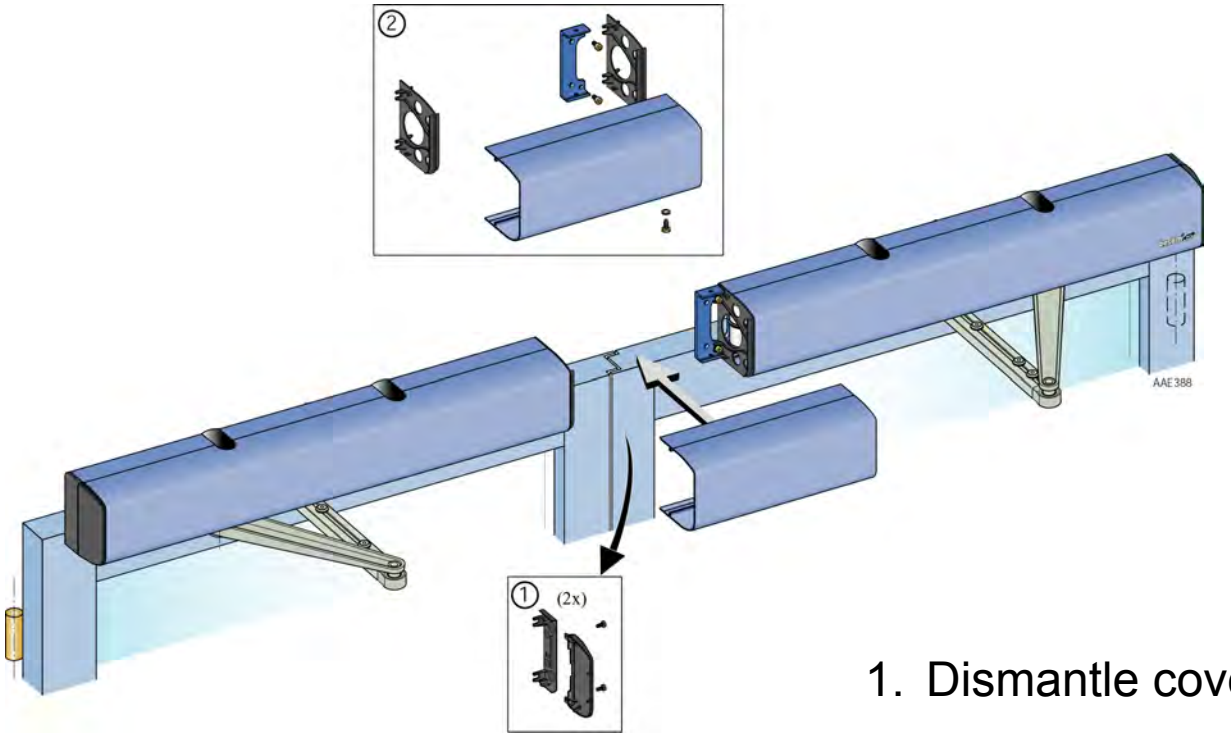

1. Dismantle cover end plates
2. Assemble the cover kit for double doors as shown

besam®

Fitting the special cover

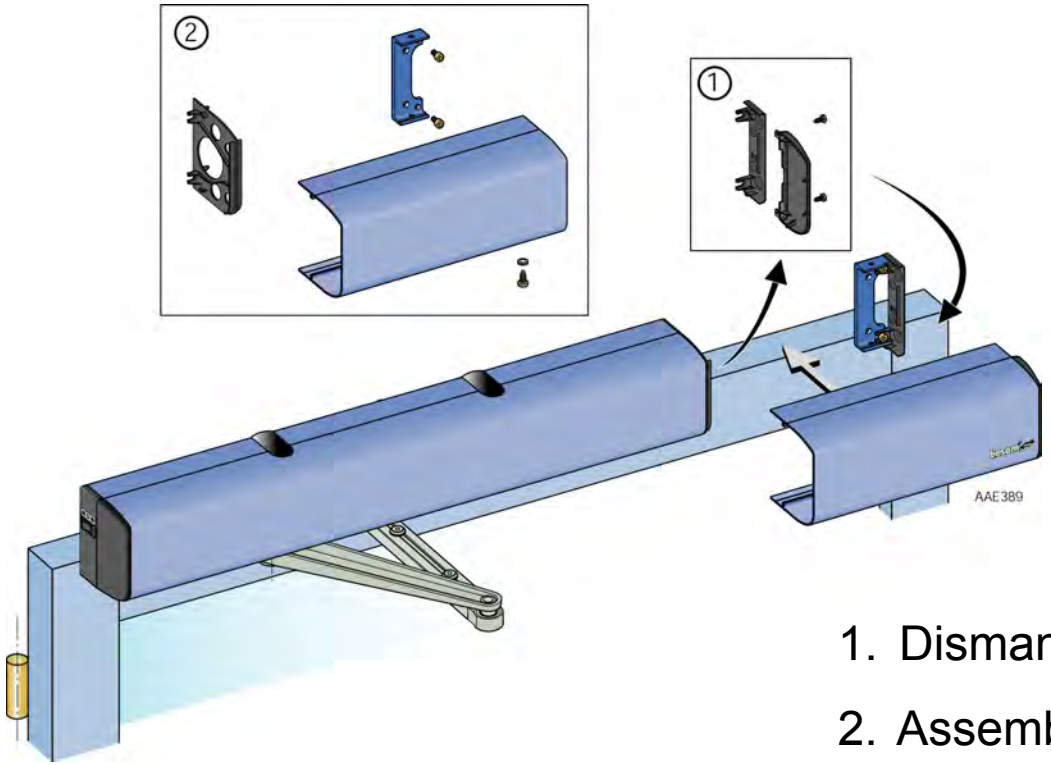

1. Dismantle cover end plate
2. Assemble the cover kit for special cover as shown

besam®

Installation examples

A. Steel reinforcement or rivnut

B. Steel reinforcement

C. Expansion-shell bolt min. M6x85

D. Wood reinforcement

E. Steel beam

Aluminium profile system

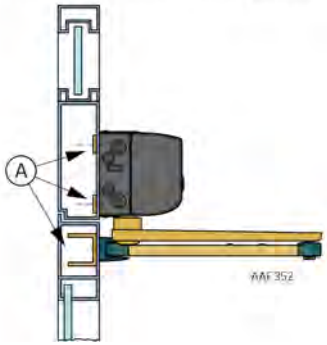

Plasterboard wall

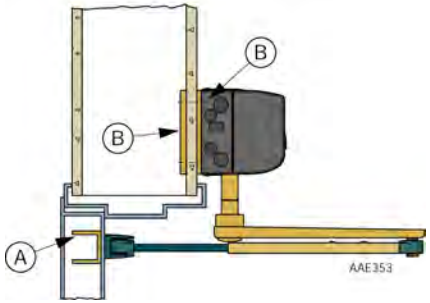

Reinforced concrete wall and brick wall

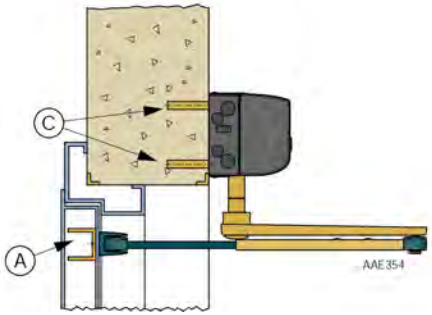

Plasterboard wall

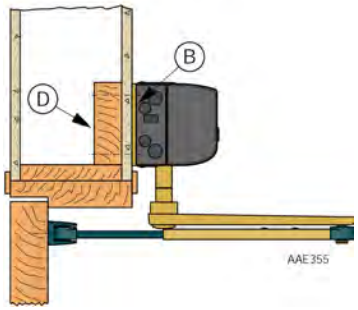

Reinforced concrete wall

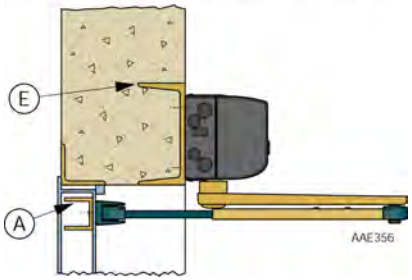

besam®

Accessories

Cover – of clear anodized or paint finished aluminium.

Programme selector – PSK-2, PSW-2, PS-4C and PS-3A.

Activation units – see separate installation instructions.

Extension unit, EXA- to be used if additional functions are required e.g. presence impulse, presence detection, Push and Go.

Control unit, CSDA-F – to be used e.g. when the operator is installed on fire or fume gas protected doors or for connection of 24V AC to an electric striking plate

Arm system – PUSH, SAS-F and PULL.

Arm stop – to be mounted on pushing arm system to prevent more than 100° opening

Shaft extension –20, 50 and 70 mm (3/4”, 2” and 2-3/4”).

besam®

Cont. Accessories

Shaft extension SEK – including bearing for extension 70-420 mm (2-3/4” – 16-17/32”).

Coordination unit COOA – guarantees a safe and correct closing of rebated doors.

Limit switch – to be used in combination with EXA to obtain Push & Go or mat safety.

Mounting plate – for reinforcement of the wall, 125x6 mm (4-59/64” x 15/64”).

besam®

The New Besam Swing door operator

PowerSwing

END

besam®

Door leaf-mounted operator, arm system SAS-F-5

- Cut out the appropriate template from the card board box and turn it upside down.
- Decide X (2-17 mm) and move the template max. 180 mm away from the line ℄1.
- Make sure that the operator will not hit the wall when the door is open 90°.
- Use the stickers in the mounting kit to fix the template to the wall.
- Punch where to drill

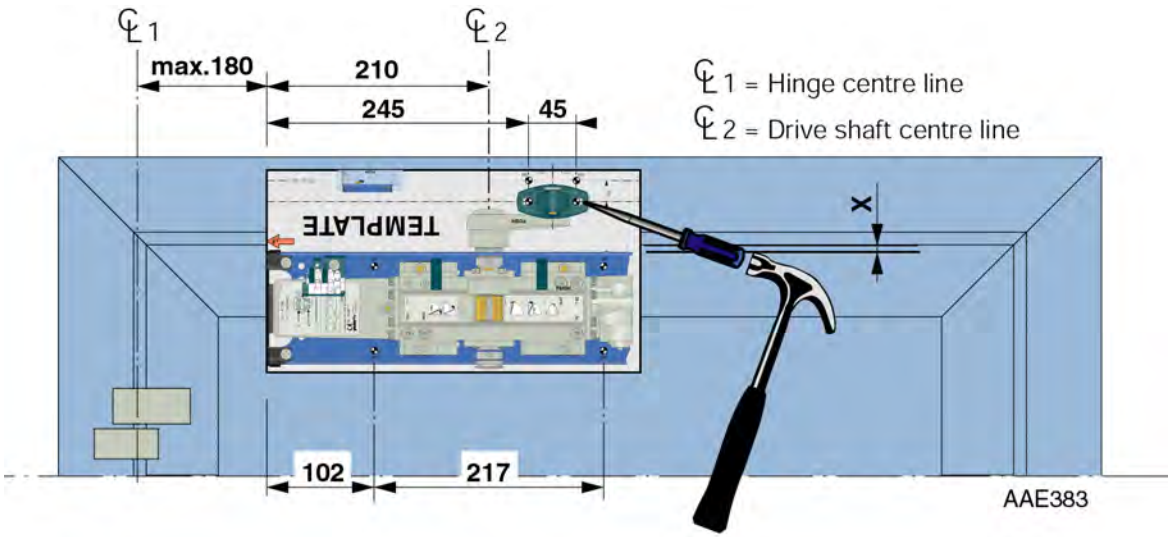

Door leaf-mounted operator, arm system SAS-F-5

1. Drill the four mounting holes and the two holes for the door fitting.
2. Remove the template.
3. Tap, plug, or reinforce with rivnuts and screw the drive unit tight.

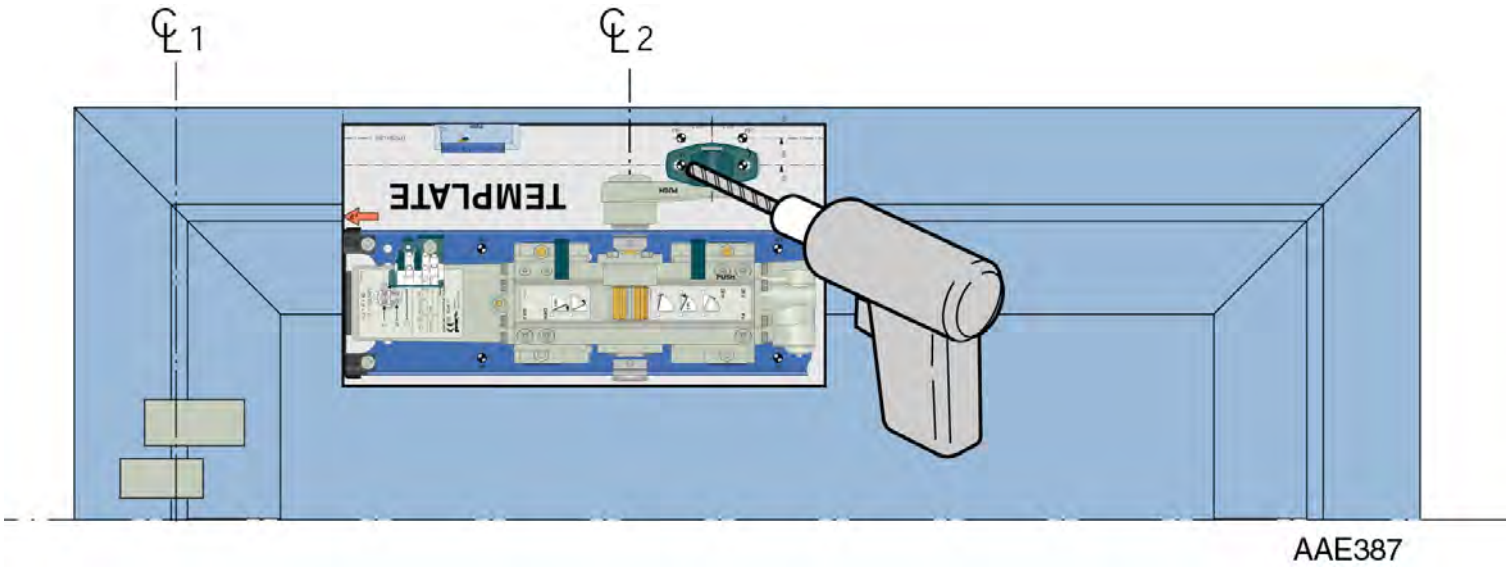

besam®

Door leaf-mounted operator

- Mount the connection box on the wall.
- Mount the flexible hose and do the wiring.

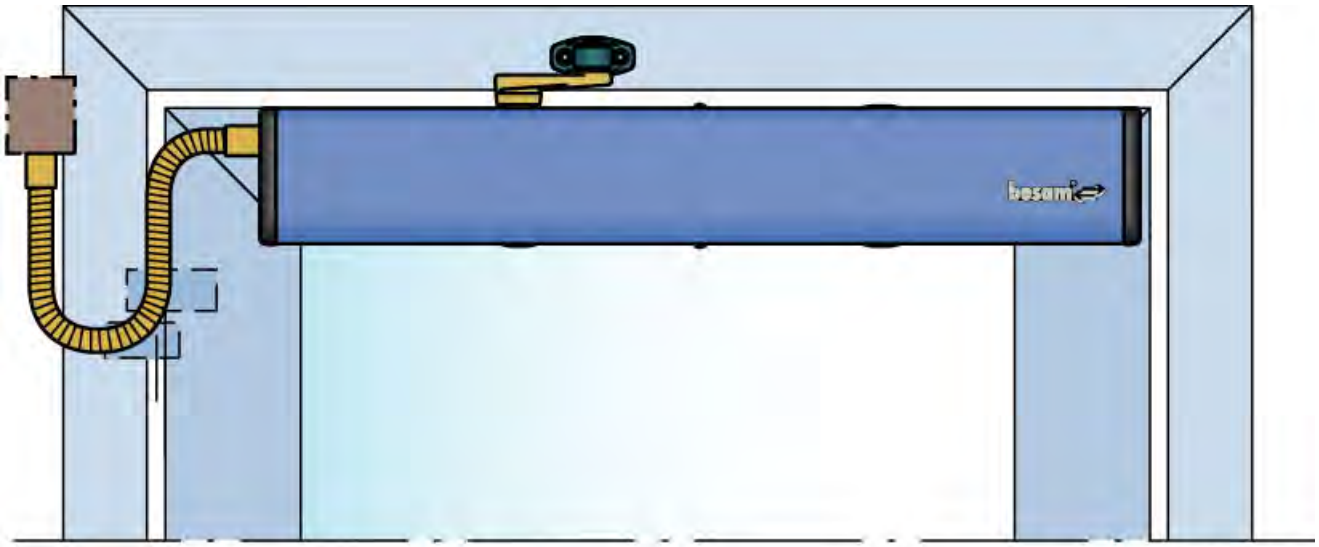

AAE323

The New Besam Swing door operator

PowerSwing

END

besam®